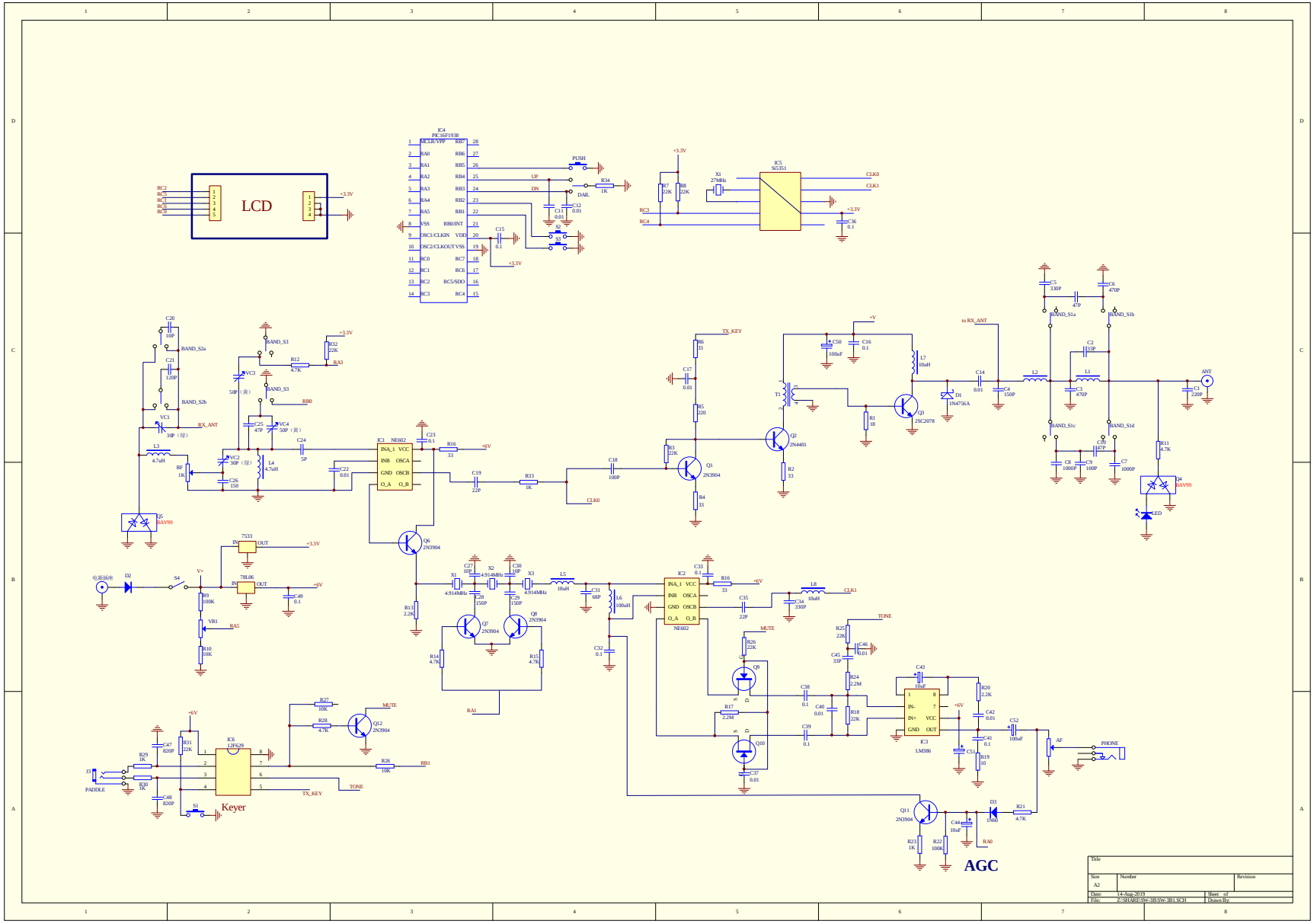

Wuxi Venus Information Technology Co., Ltd